Off-Line Quasi-Resonant Switching Regulators

Features and Benefits

- Quasi-resonant topology IC ⇒ Low EMI noise and soft switching
- Bottom-skip mode ⇒ Improved system efficiency over the entire output load by avoiding increase of switching frequency
- Auto-Standby mode ⇒ Lowers input power at very light output load condition
- Avalanche-guaranteed MOSFET ⇒ Improves system-level reliability and does not require V_{DSS} derating
- 500 V_{DSS} / 0.36 Ω $R_{DS(on)}$
- Various protections ⇒ Improved system-level reliability
  - Pulse-by-pulse drain overcurrent limiting
  - Overvoltage Protection (bias winding voltage sensing), with latch
  - Overload Protection with latch
  - Maximum on-time limit

Package: 7-Pin TO-3P

Not to scale

Description

The STR-X6737 is a quasi-resonant topology IC designed for SMPS applications. It shows lower EMI noise characteristics than conventional PWM solutions, especially at greater than 2 MHz. It also provides a soft-switching mode to turn on the internal MOSFET at close to zero voltage (V_{DS} bottom point) by use of the resonant characteristic of primary inductance and a resonant capacitor.

The package is a fully molded TO-3P, which contains the controller chip (MIC) and MOSFET, enabling output power up to 280 W at 120 VAC input. The bottom-skip mode skips the first bottom of V_{DS} and turns on the MOSFET at the second bottom point, to minimize an increase of operating frequency at light output load, improving system-level efficiency over the entire load range.

There are two standby modes available to reduce the input power under very light load conditions. The first is Auto-Standby mode, which is internally triggered by periodic sensing, and the other is a manual standby mode, which is executed by clamping the secondary output. In general applications, the manual standby mode reduces the input power further compared to Auto-Standby mode.

Continued on the next page…

Typical Application

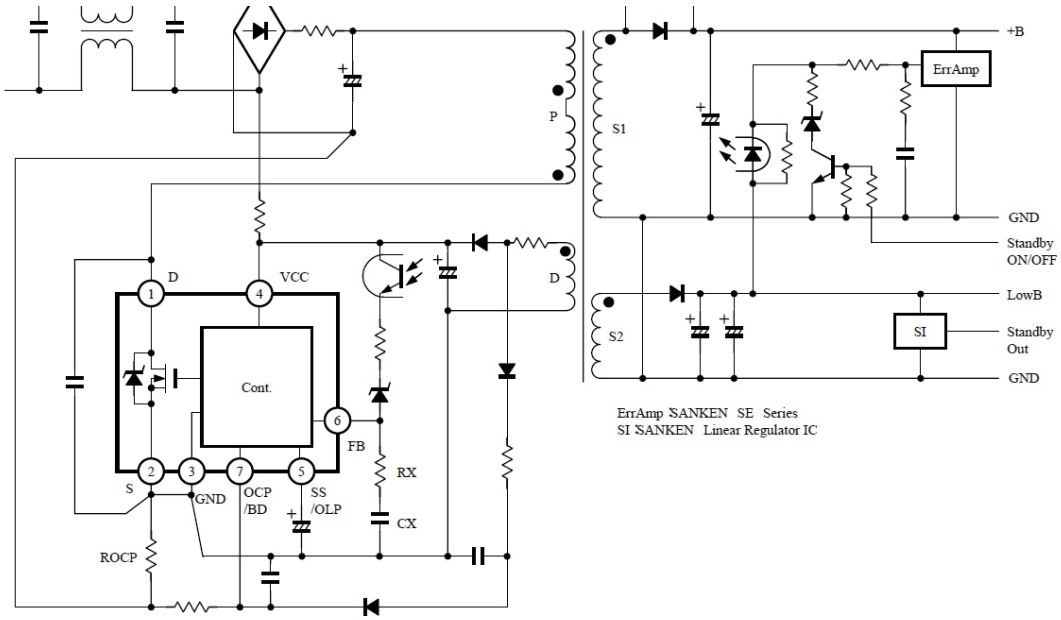

SANKEN ELECTRIC CO., LTD.
http://www.sanken-ele.co.jp

Description (continued)

The soft-start mode minimizes surge voltage and reduces power stress to the MOSFET and to the secondary rectifying diodes during the start-up sequence. Various protections such as overvoltage, overload, overcurrent, maximum on-time protections and avalanche-energy-guaranteed MOSFET secure good system-level reliability.

Applications include the following:
- Set Top Box
- LCD PC monitor, LCD TV
- Printer, Scanner
- SMPS power supplies

Selection Guide

Part Number	Package
STR-X6737	TO-3P

Absolute Maximum Ratings at T_A = 25°C

Parameter	Symbol	Conditions	Rating	Unit
Drain Current[1]	$I_D$peak	Single pulse	22	A
Maximum Switching Current[2]	I_{Dmax}	T_A = –20°C to 125°C	22	A
Single Pulse Avalanche Energy[3]	E_{AS}	Single pulse, V_{DD} = 30 V, L = 50 mH, I_{Lpeak} = 3.0 A	239	mJ
Input Voltage for Controller (MIC)	V_{CC}		35	V
SS/OLP Terminal Voltage	V_{SSOLP}		–0.5 to 6.0	V
FB Terminal Inflow Current	I_{FB}		10	mA
FB Terminal Voltage	V_{FB}	I_{FB} within the limits of I_{FB}	–0.5 to 9.0	V
OCP/BD Terminal Voltage	V_{OCPBD}		–1.5 to 5.0	V
MOSFET Power Dissipation[4]	P_{D1}	With infinite heatsink	44	W
		Without heatsink	2.8	W
Controller (MIC) Power Dissipation	P_{D2}	$V_{CC} \times I_{CC}$	0.8	W
Operating Internal Leadframe Temperature	T_F	Recommended operation temperature, see cautions	–20 to 125	°C
Operating Ambient Temperature	T_{OP}		–20 to 125	°C
Storage Temperature	T_{stg}		–40 to 125	°C
Channel Temperature	T_{ch}		150	°C

[1]Refer to MOSFET ASO curve
[2]I_{DMAX} is the drain current determined by the drive voltage of the IC and the threshold voltage, V_{th}, of the MOSFET
[3]Refer to Avalanche Energy Derating curve
[4]Refer to MOSFET Ta-PD1 curve

All performance characteristics given are typical values for circuit or system baseline design only and are at the nominal operating voltage and an ambient temperature, T_A, of 25°C, unless otherwise stated.

Functional Block Diagram

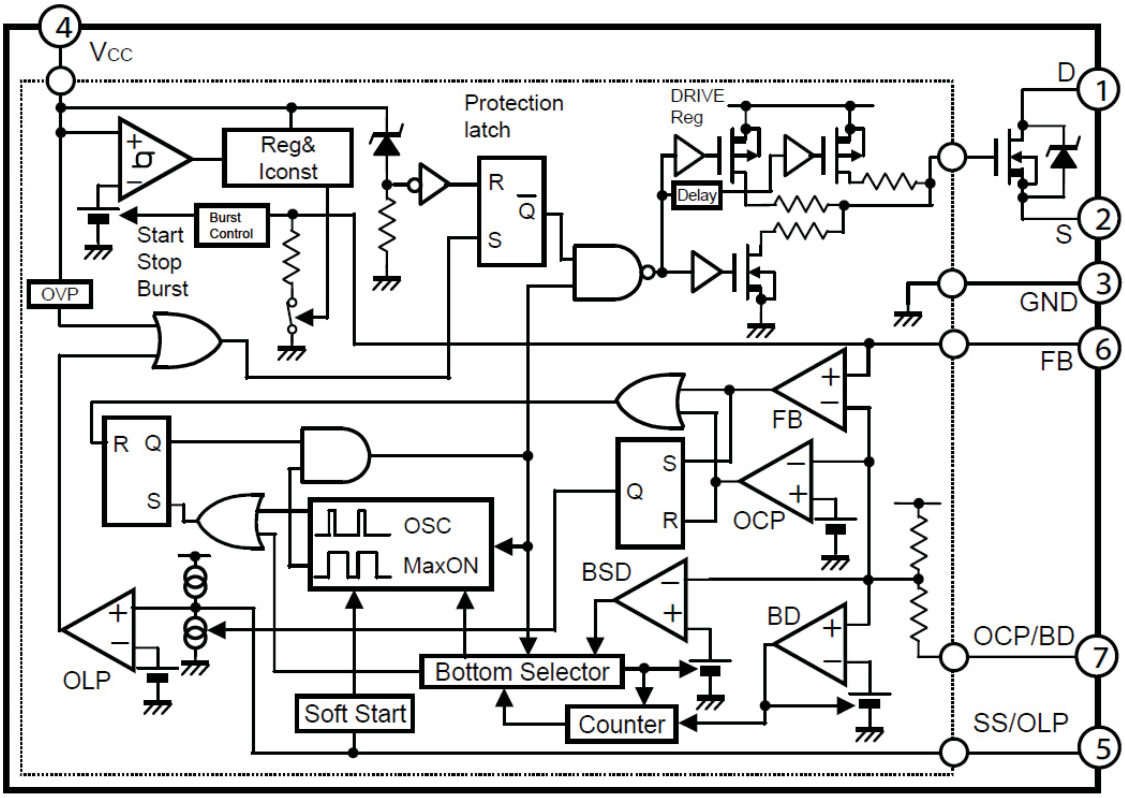

Terminal List Table

Number	Name	Description	Functions
1	D	Drain	MOSFET drain
2	S	Source	MOSFET source
3	GND	Ground terminal	Ground
4	VCC	Power supply terminal	Input of power supply for control circuit
5	SS/OLP	Soft Start/Overload Protection terminal	Input to set delay for Overload Protection and Soft Start operation
6	FB	Feedback terminal	Input for Constant Voltage Control and Burst (intermittent) Mode oscillation control signals
7	OCP/BD	Overcurrent Protection/Bottom Detection	Input for Overcurrent Detection and Bottom Detection signals

STR-X6737
A.S.O. temperature derating coefficient Curve

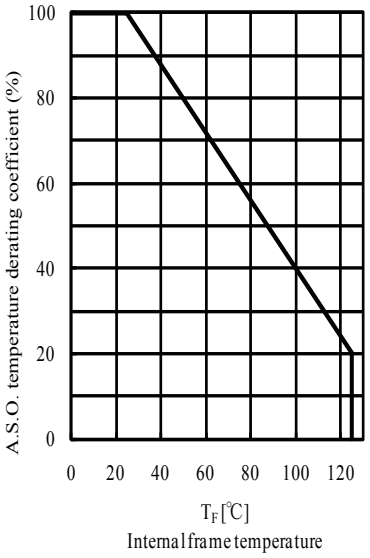

STR-X6737
MOSFET A.S.O. Curve
Ta=25℃ Single pluse

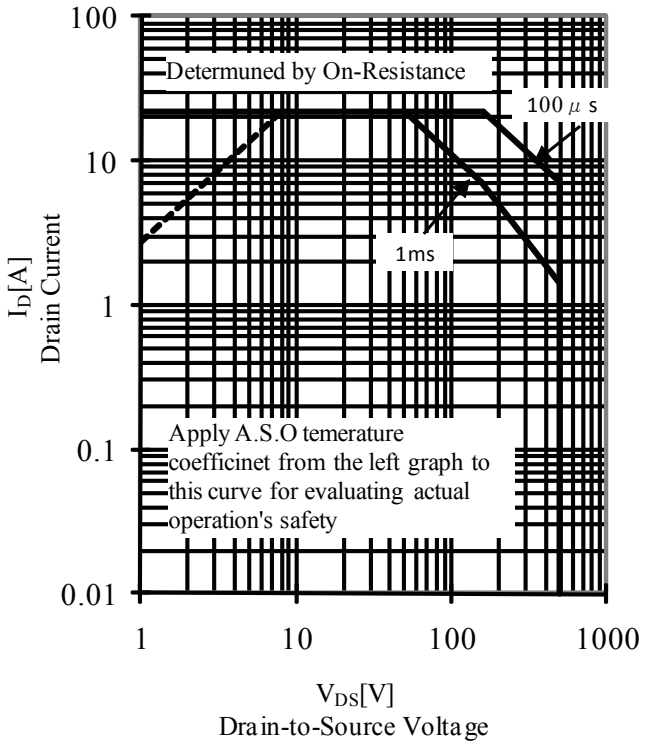

STR-X6737
Avalanche energy derating curve

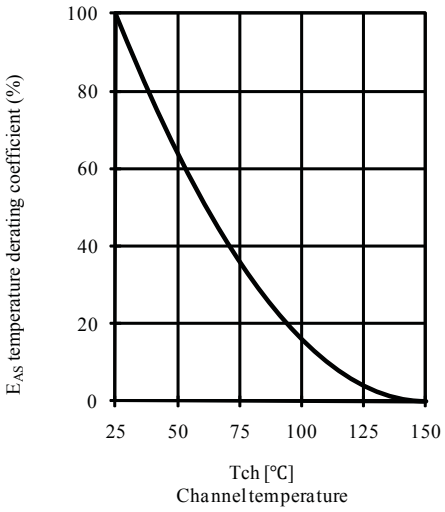

STR-X6737
MOSFET Ta-P_{D1} Curve

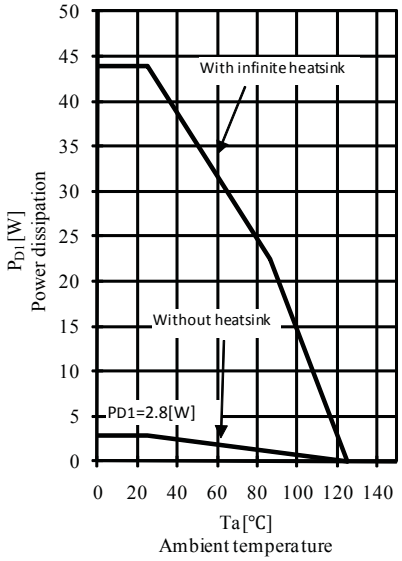

STR-X6737
MIC T_F-P_{D2} Curve

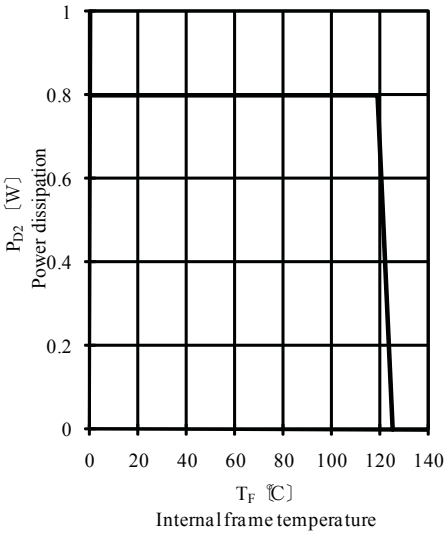

STR-X6737
Transient thermal resistance curve

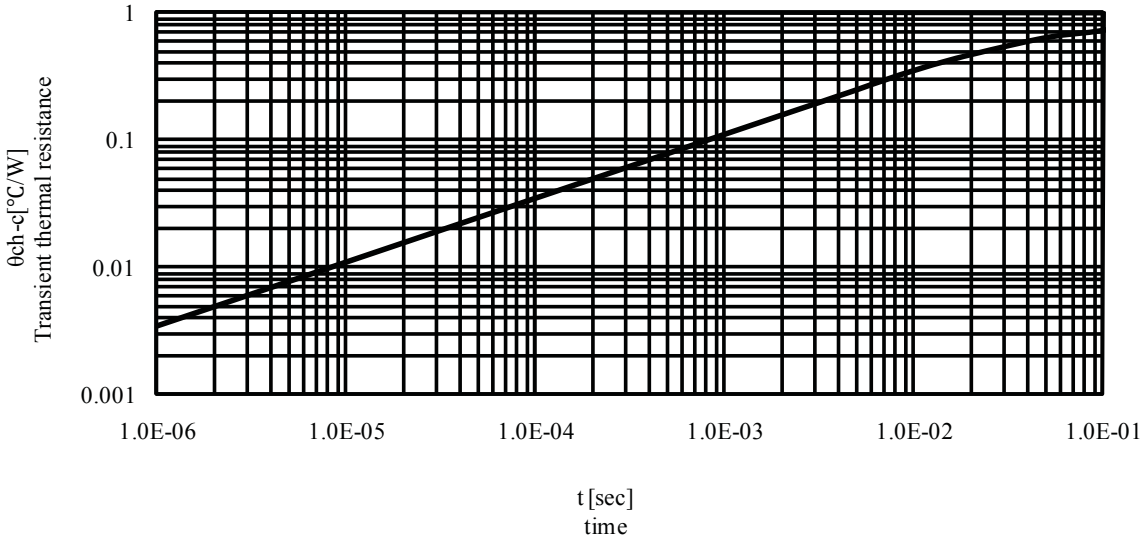

ELECTRICAL CHARACTERISTICS

Characteristic	Symbol	Test Conditions	Min.	Typ.	Max.	Units
ELECTRICAL CHARACTERISTICS for Controller (MIC)[1], valid at T_A = 25°C, V_{CC} = 20 V, unless otherwise specified						
Power Supply Start-up Operation						
Operation Start Voltage	$V_{CC(ON)}$	V_{CC} = 0→20 V	16.3	18.2	19.9	V
Operation Stop Voltage	$V_{CC(OFF)}$	V_{CC} = 20→8.8 V	8.8	9.7	10.6	V
Circuit Current In Operation	$I_{CC(ON)}$		–	–	6	mA
Circuit Current In Non-Operation	$I_{CC(OFF)}$	V_{CC} = 15 V	–	–	100	µA
Oscillation Frequency	f_{osc}		19	22	25	kHz
Soft Start Operation Stop Voltage	$V_{SSOLP(SS)}$	$V_{SS/OLP}$ increasing	1.1	1.2	1.4	V
Soft Start Operation Charging Current	$I_{SSOLP(SS)}$	$V_{SS/OLP}$ = 0 V	–710	–550	–390	µA
Normal Operation						
Bottom-Skip Operation Threshold Voltage 1	$V_{OCPBD(BS1)}$		–0.720	–0.665	–0.605	V
Bottom-Skip Operation Threshold Voltage 2	$V_{OCPBD(BS2)}$		–0.485	–0.435	–0.385	V
Overcurrent Detection Threshold Voltage	$V_{OCPBD(LIM)}$	$V_{OCP/BD}$ falling	–0.995	–0.940	–0.895	V
OCP/BD Terminal Outflow Current	I_{OCPBD}	$V_{OCP/BD}$ = –0.95 V	–250	–100	–40	µA
Quasi-Resonant Operation Threshold Voltage 1	$V_{OCPBD(TH1)}$	$V_{OCP/BD}$ falling	0.28	0.40	0.52	V
Quasi-Resonant Operation Threshold Voltage 2	$V_{OCPBD(TH2)}$	$V_{OCP/BD}$ rising	0.67	0.80	0.93	V
FB Terminal Threshold Voltage	$V_{FB(OFF)}$	V_{FB} rising	1.32	1.45	1.58	V
FB Terminal Inflow Current (Normal Operation)	$I_{FB(ON)}$	V_{FB} = 1.6 V	600	1000	1400	µA
Standby Operation						
Standby Operation Start Voltage	$V_{CC(S)}$	V_{CC} = 0→15 V, V_{FB} = 1.6 V	10.3	11.2	12.1	V
Standby Operation Start Voltage Interval	$V_{CC(SK)}$	$V_{CC(SK)} = V_{CC(S)} – V_{CC(OFF)}$	1.10	1.35	1.65	V
Standby Non-Operation Circuit Current	$I_{CC(S)}$	V_{CC} = 10.2 V, V_{FB} = 1.6 V	–	20	56	µA
FB Terminal Inflow Current, Standby Operation	$I_{FB(S)}$	V_{CC} = 10.2 V, V_{FB} = 1.6 V	–	4	14	µA
FB Terminal Threshold Voltage, Standby Operation	$V_{FB(S)}$	V_{CC} = 15 V, V_{FB} rising	0.55	1.10	1.50	V
Minimum On Time	$t_{ON(MIN)}$		0.75	1.10	1.50	µs
Protection Operation						
Maximum On Time	$t_{ON(MAX)}$		27.5	32.5	39.0	µs
Overload Protection Operation Threshold Voltage	$V_{SSOLP(OLP)}$		4.0	4.9	5.8	V
Overload Protection Operation Charging Current	$I_{SSOLP(OLP)}$	$V_{SS/OLP}$ = 2.5 V	–16	–11	–6	µA
Overvoltage Protection Operation Voltage	$V_{CC(OVP)}$	V_{CC} = 0→30 V	25.5	27.7	29.9	V
Latch Circuit Holding Current[2]	$I_{CC(H)}$	$V_{CC(OFF)}$ – 0.3 V	–	45	140	µA
Latch Circuit Release Voltage[2]	$V_{CC(La.OFF)}$	V_{CC} = 30→6 V, OVP operating	6.0	7.2	8.5	V
ELECTRICAL CHARACTERISTICS for MOSFET, valid at T_A = 25°C, unless otherwise specified						
Drain-to-Source Breakdown Voltage	V_{DSS}	I_{DSS} = 300 µA	500	–	–	V
Drain Leakage Current	I_{DSS}	V_{DSSS} = 500 V	–	–	300	µA
On Resistance	$R_{DS(on)}$	I_{DS} = 4.0 A	–	–	0.36	Ω
Switching Time	t_f		–	–	500	ns
Thermal Resistance	$R_{\theta ch-F}$	Channel to internal frame	–	–	1.09	°C/W

[1]Current polarity with respect to the IC: positive current indicates current sink at the terminal named, negative current indicates source at the terminal named.
[2]The latch circuit means a circuit operated OVP and OLP.

Package Outline Drawing, TO-3P

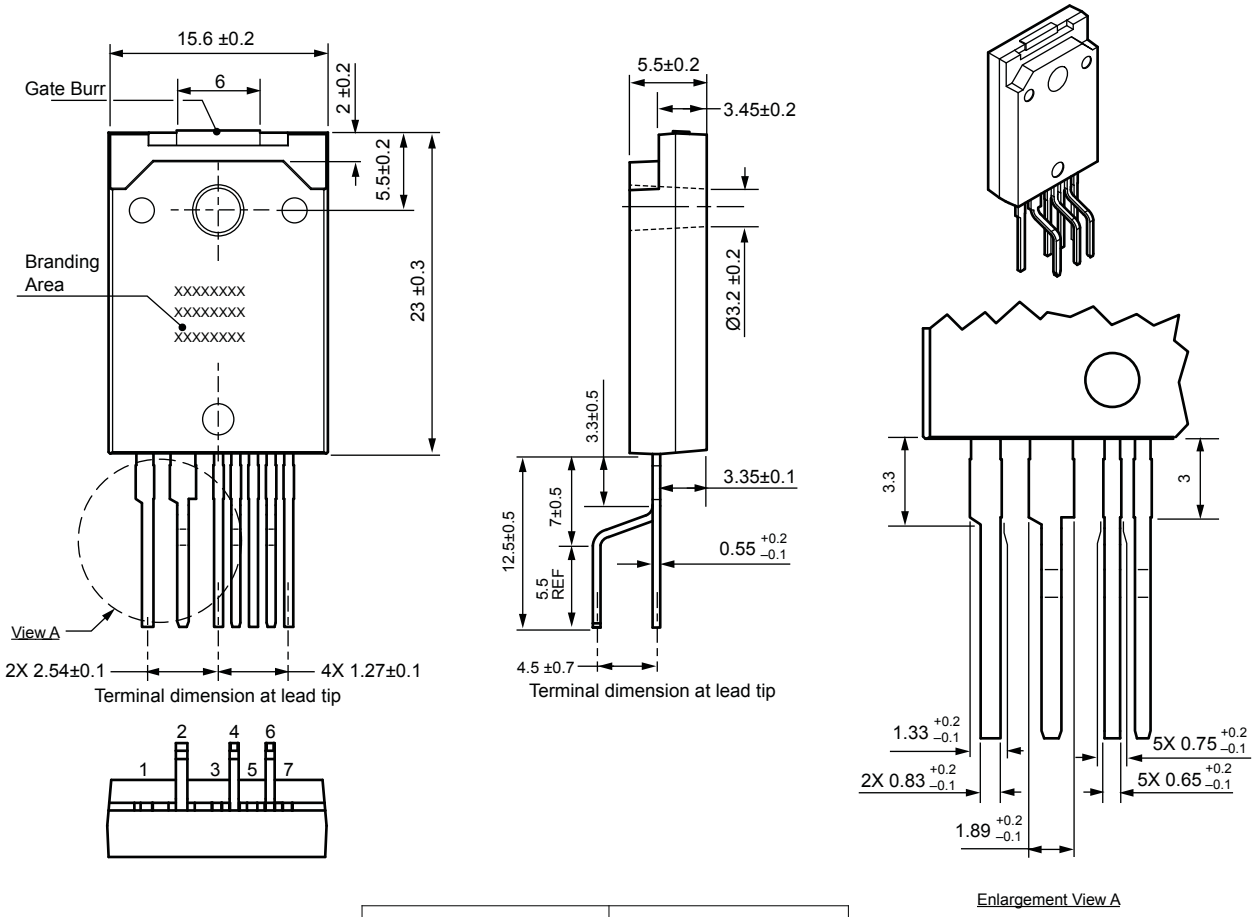

Gate burr: 0.3 mm (max.)
Terminal core material: Cu
Terminal treatment: Ni plating and Pb-free solder dip
Leadform: 1901

Approximate weight: 6 g

Dimensions in millimeters

Drawing for reference only
Branding codes (exact appearance at manufacturer discretion):
1st line, type: STR
2nd line, subtype: X6737
3rd line, lot: *YM DD*
Where: Y is the last digit of the year of manufacture
M is the month (*1* to *9, O, N, D*)
DD is the 2-digit date

Leadframe plating Pb-free. Device composition includes high-temperature solder (Pb >85%), which is exempted from the RoHS directive.

Because reliability can be affected adversely by improper storage environments and handling methods, please observe the following cautions.

Cautions for Storage

- Ensure that storage conditions comply with the standard temperature (5°C to 35°C) and the standard relative humidity (around 40% to 75%); avoid storage locations that experience extreme changes in temperature or humidity.
- Avoid locations where dust or harmful gases are present and avoid direct sunlight.
- Reinspect for rust on leads and solderability of the products that have been stored for a long time.

Cautions for Testing and Handling

When tests are carried out during inspection testing and other standard test periods, protect the products from power surges from the testing device, shorts between the product pins, and wrong connections. Ensure all test parameters are within the ratings specified by Sanken for the products.

Remarks About Using Silicone Grease with a Heatsink

- When silicone grease is used in mounting the products on a heatsink, it shall be applied evenly and thinly. If more silicone grease than required is applied, it may produce excess stress.
- Volatile-type silicone greases may crack after long periods of time, resulting in reduced heat radiation effect. Silicone greases with low consistency (hard grease) may cause cracks in the mold resin when screwing the products to a heatsink.
  Our recommended silicone greases for heat radiation purposes, which will not cause any adverse effect on the product life, are indicated below:

Type	Suppliers
G746	Shin-Etsu Chemical Co., Ltd.
YG6260	Momentive Performance Materials Inc.
SC102	Dow Corning Toray Co., Ltd.

Cautions for Mounting to a Heatsink

- When the flatness around the screw hole is insufficient, such as when mounting the products to a heatsink that has an extruded (burred) screw hole, the products can be damaged, even with a lower than recommended screw torque. For mounting the products, the mounting surface flatness should be 0.05 mm or less.
- Please select suitable screws for the product shape. Do not use a flat-head machine screw because of the stress to the products. Self-tapping screws are not recommended. When using self-tapping screws, the screw may enter the hole diagonally, not vertically, depending on the conditions of hole before threading or the work situation. That may stress the products and may cause failures.
- Recommended screw torque: 0.588 to 0.785 N●m (6 to 8 kgf●cm).
- For tightening screws, if a tightening tool (such as a driver) hits the products, the package may crack, and internal stress fractures may occur, which shorten the lifetime of the electrical elements and can cause catastrophic failure. Tightening with an air driver makes a substantial impact. In addition, a screw torque higher than the set torque can be applied and the package may be damaged. Therefore, an electric driver is recommended.
  When the package is tightened at two or more places, first pre-tighten with a lower torque at all places, then tighten with the specified torque. When using a power driver, torque control is mandatory.

Soldering

- When soldering the products, please be sure to minimize the working time, within the following limits:
  260±5°C 10±1 s (Flow, 2 times)
  380±10°C 3.5±0.5 s (Soldering iron, 1 time)
- Soldering should be at a distance of at least 2.0 mm from the body of the products.

Electrostatic Discharge

- When handling the products, the operator must be grounded. Grounded wrist straps worn should have at least 1 MΩ of resistance from the operator to ground to prevent shock hazard, and it should be placed near the operator.
- Workbenches where the products are handled should be grounded and be provided with conductive table and floor mats.
- When using measuring equipment such as a curve tracer, the equipment should be grounded.
- When soldering the products, the head of soldering irons or the solder bath must be grounded in order to prevent leak voltages generated by them from being applied to the products.
- The products should always be stored and transported in Sanken shipping containers or conductive containers, or be wrapped in aluminum foil.

Recommended operation temperature

- Inner frame temperature in operation T_F = 115°C

- The contents in this document are subject to changes, for improvement and other purposes, without notice. Make sure that this is the latest revision of the document before use.
- Application and operation examples described in this document are quoted for the sole purpose of reference for the use of the products herein and Sanken can assume no responsibility for any infringement of industrial property rights, intellectual property rights or any other rights of Sanken or any third party which may result from its use.
- Although Sanken undertakes to enhance the quality and reliability of its products, the occurrence of failure and defect of semiconductor products at a certain rate is inevitable. Users of Sanken products are requested to take, at their own risk, preventative measures including safety design of the equipment or systems against any possible injury, death, fires or damages to the society due to device failure or malfunction.
- Sanken products listed in this document are designed and intended for the use as components in general purpose electronic equipment or apparatus (home appliances, office equipment, telecommunication equipment, measuring equipment, etc.).

  When considering the use of Sanken products in the applications where higher reliability is required (transportation equipment and its control systems, traffic signal control systems or equipment, fire/crime alarm systems, various safety devices, etc.), and whenever long life expectancy is required even in general purpose electronic equipment or apparatus, please contact your nearest Sanken sales representative to discuss, prior to the use of the products herein.

  The use of Sanken products without the written consent of Sanken in the applications where extremely high reliability is required (aerospace equipment, nuclear power control systems, life support systems, etc.) is strictly prohibited.
- In the case that you use Sanken products or design your products by using Sanken products, the reliability largely depends on the degree of derating to be made to the rated values. Derating may be interpreted as a case that an operation range is set by derating the load from each rated value or surge voltage or noise is considered for derating in order to assure or improve the reliability. In general, derating factors include electric stresses such as electric voltage, electric current, electric power etc., environmental stresses such as ambient temperature, humidity etc. and thermal stress caused due to self-heating of semiconductor products. For these stresses, instantaneous values, maximum values and minimum values must be taken into consideration.

  In addition, it should be noted that since power devices or IC's including power devices have large self-heating value, the degree of derating of junction temperature affects the reliability significantly.
- When using the products specified herein by either (i) combining other products or materials therewith or (ii) physically, chemically or otherwise processing or treating the products, please duly consider all possible risks that may result from all such uses in advance and proceed therewith at your own responsibility.
- Anti radioactive ray design is not considered for the products listed herein.
- Sanken assumes no responsibility for any troubles, such as dropping products caused during transportation out of Sanken's distribution network.
- The contents in this document must not be transcribed or copied without Sanken's written consent.