# *Soldering Methods for Allegro Products (SMD and Through-Hole)*

By Bradley Smith and John Sauber
Allegro MicroSystems, LLC

## SCOPE

This document describes typical soldering methods that have been proven effective with Allegro™ products. It provides information on SMD (surface mount devices) and through-hole packages. Both lead (Pb) free and traditional Pb-based technologies are examined.

## AVAILABLE STANDARDS

Allegro recommends becoming familiar with IPC/JEDEC Joint Industry Standard J-STD-020, *Moisture/Reflow Sensitivity Classification for Nonhermetic Solid State Surface Mount Devices*. It provides information on MSL (moisture sensitivity level) classifications for devices, and the corresponding protocols for device handling. In addition, important information on determining optimum soldering process parameters can be found in J-STD-002, *Solderability Tests for Component Leads, Terminations, Lugs, Terminals and Wires*.

The characterization of an acceptable solder joint can be somewhat different between Pb-based and Pb-free technologies. The IPC has a number of publications and course materials that provide information on joint evaluation. A primary source is IPC J-STD-001, *Requirements for Soldered Electrical and Electronic Assemblies*, which is an industry-level consensus standard covering soldering materials and processes, with revision D and later including coverage of Pb-free soldering. IPC-A-610, *Acceptability of Electronic Assemblies,* provides details workmanship standards, with revision D and later including coverage of Pb-free processes. IPC-2221, *Generic Standard on Printed Board Design*, provides a notation for dimensioning joints. JEDEC standard JESD22-B102, *Solderability*, provides acceptance criteria.

Parallel bodies of standards and information are available from the IEC (International Electrotechnical Commission), which is a particularly good source for international and European standards, and from JEITA (Japan Electronics and Information Technology Industries Association).

## PROCESS TEMPERATURE AND MSLS

A significant process concern is the absorption of atmospheric moisture by devices before exposure to elevated soldering temperatures. Although important in all types of soldering processes, this interaction of preprocess handling and process temperatures becomes an even more critical consideration in Pb-free soldering processes, where maximum reflow temperatures are typically higher in comparison with traditional Pb-based soldering processes.

The device packages commonly used throughout the industry, including by Allegro, are nonhermetic. The cases are composed of plastic epoxy molding compounds that absorb moisture and other contaminants. Exposure to atmospheric moisture over even short periods of time can allow enough moisture to be absorbed to have serious effects when vaporized during process heating. As shown in figure 1, vapor pressure increases rapidly as temperature increases, resulting in a disproportionate increase in pressure for the comparatively small increments of process temperature between

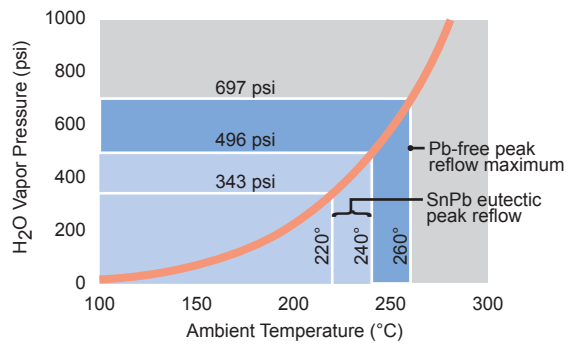


*Figure 1. Water Vapor Pressure versus Ambient Temperature. This standard curve demonstrates that increasing peak reflow temperature from the SnPb range to the Pb-free maximum levels significantly increases vapor pressure.*

the different process types. From a Pb-based process peak of about 220°C (493 K), to the Pb-free lower range in the vicinity of 240°C (513 K), is an increase of approximately 4% in temperature, but 45% in vapor pressure. The transition from Pb-based to the maximum limit of 260°C (533 K) involves a temperature increase of only about 8%, but the vapor pressure increase is approximately 103%.

To avoid delamination from vaporization effects, take care to avoid exceeding the maximum floor life of the devices. In this context, floor life is linked to the rate at which the device absorbs atmospheric moisture, represented by the MSL rating, with MSL 1 being the most resistant to delamination. Protocols for rating moisture absorption, as well as absorption abatement, are provided in J-STD-020, revisions C and later. Information on the MSL rating is provided in the labeling on the device packing labels. MSL ratings are linked to peak process temperatures. If processing near maximum temperature levels, it may be necessary to handle devices according to practices for lower MSL levels.

## TERMINAL FINISHES

To be considered completely Pb-free, not only must products be assembled with Pb-free solder and solder paste, but the devices must be Pb-free in construction. One important device construction aspect for solderability is the finish on the terminals.

### Finish Appearance

Pb-based finishes and matching solders can be bright and reflective, allowing automated verification of joint quality by optical inspection equipment. Pb-free finishes and resulting solder joints tend to be inherently less bright and reflective compared to those of Pb-based finishes. This does not affect solder joint integrity, and is recognized in IPC J-STD-001, as a characteristic of materials and processes:

> "There are solder alloy compositions, component lead and terminal finishes…and special soldering processes…that may produce dull, matte, gray, or grainy appearing solders that are normal…these solder joints are acceptable.

> "The primary difference between the solder connections created with processes using tin-lead alloys and processes using lead free alloys is related to the visual appearance of the solder. All other solder fillet criteria are the same…Lead-free and tin-lead connections may exhibit similar appearances but lead free alloys are more likely to have surface roughness (grainy or dull) or different wetting contact angles." (Rev. D, §4.14).

This characteristic is exacerbated by use of higher temperatures during manufacturing, testing, bake-out, and soldering. Allegro devices are subjected to more testing than is common in the industry. This ensures high reliability for the device, but may cause terminal platings to appear dull or tarnished. Another source of dulling is exposure to atmospheric conditions during long-term storage of devices before soldering into an assembly. Such appearance factors are not significant to the integrity of the solder joint.

Automatic optical inspection equipment may have to be adjusted to offset the lower illumination returned by Pb-free materials. This can help to prevent rejection of devices that in fact have proper finish and joints that have been properly formed. Unless optical inspection equipment is tuned to device terminals and joints with duller finishes, usable devices and assemblies may be unnecessarily rejected or reworked.

### Finish Coverage

The finish that is plated over the base metal core of the leadframe protects the copper core and performs a vital role in the effectiveness of the solder joint, by providing a surface that is easily wetted by the solder.

Three primary process factors affect how the plating on exposed leads and contacts cover and provide a wetting surface for solder: molding flash, mechanical wear, and oxidation due to singulation.

**Molding Flash**. Although plating can be applied to terminals prior to or after casting the molding compound that forms the device case, in most cases it is performed after casting. In the case of small leadless packages (QFNs and SONs), finish is always applied after mold casting.

During casting, the leadframe and die assembly are enclosed from above and below by the mold halves. The mold halves remain separated by the leadframe, as shown in figure 2.

When the molding compound is injected forcibly into the mold cavity, excess compound extrudes through the gaps between the terminals, and smaller amounts seep between the mold halves and the upper and lower surfaces of the terminals. When the compound cools and the device is ejected, most of the excess between the terminals is removed, along with the dambar sections. A residual amount of excess molding compound, referred to as *pant-leg flash*, can remain along the sides of the terminals, between the case and where the dambar sections were located. In addition, a small amount of flash may remain along the top and bottom surfaces of the therminal, near the case.

Mechanically trimming all of the residual flash could result in abrasion of the case, terminal finish, and the terminal base material. When the terminal is plated after case molding, no plating occurs where there is flash. The residual flash that is not removed is remote from the critical soldering areas of the terminal, and does not affect solder joint strength.

**Abrasion During Handling**. Terminal finish may be reduced by wear from handling after plating. Experience has shown that Pb-free devices frequently undergo additional test and evaluation cycles, which occur at elevated process temperatures. Such additional processing exposes these devices to removal of terminal finish by mechanical abrasion. For example, movement of devices though tracks while resting on terminals erodes the finish on the underside of the terminal contact area. This may impact the wetting of the terminal during soldering.

A side effect of increased abrasion is an increased risk of adhesion of debris and particulates worn from previously-processed devices. This contamination may affect solderability and require a stronger flux to be used. To help prevent this contamination, procedures must be qualified for routine and thorough cleaning of feed bowls, tracks, output bins, and carriers used for handling devices.

**Singulation**. In this process stage, the individual device packages are separated from the larger leadframe web that contains them during the various manufacturing stages. Additional lead forming and trimming may take place post-production, or at the site where the device is assembled into the end-product.

As shown in figure 2, where the terminals are trimmed at their ends, and where the dambar sections have been removed, the core copper is exposed. These exposed areas are away from the soldering critical areas. Figure 3 shows the results of singulation on QFNs and SONs. In those packages, the molding compound is a continuous block, and the individual devices are sawn out of the block. As a result, the exposed copper of the terminal ends appears in the same plane as the case wall (in some designs, the terminal does not extend as far as the saw plane, and there are no exposed copper areas on the terminals).

Where the core copper is exposed, a film of copper oxides forms eventually. This prevents wetting by the solder, except under conditions of very active flux. Soldering over exposed copper base material is not guaranteed, and is not required for joint integrity by standards such as IPC J-STD-001 or A610. For QFNs and SONs, in fact, optical inspection methods cannot be used in production, because there is characteristically no fillet formed, as the critical area of soldering between the device contacts and the solder pad lies completely underneath the package. Electrical or x-ray testing and inspection methods must be used instead.

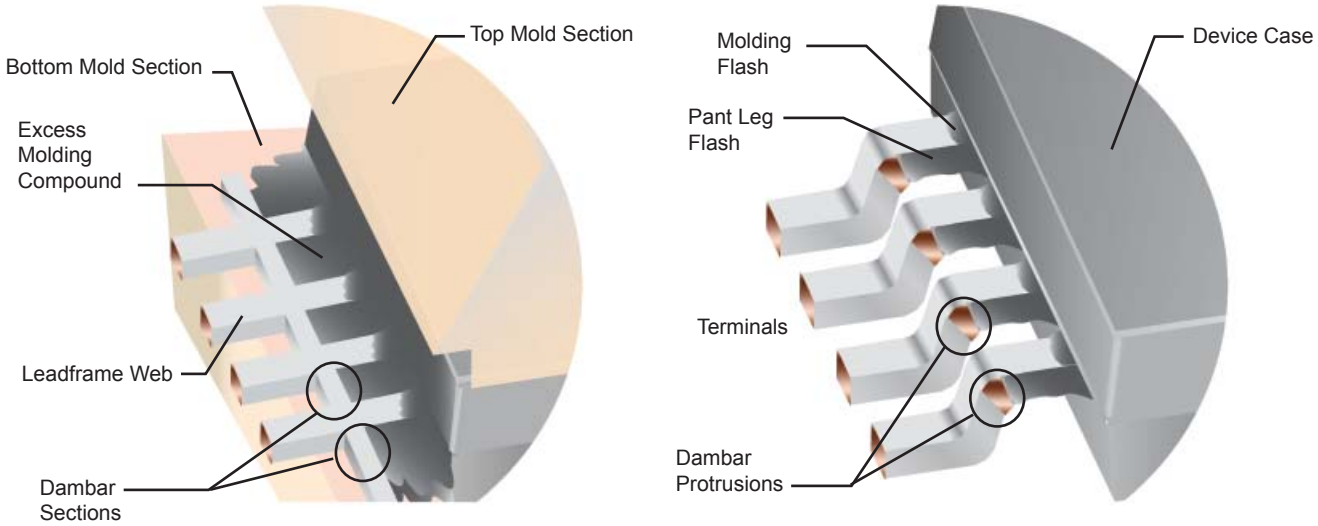


*(A) After Compound Injection and Singulation*

*(B) After Trimming and Terminal Forming*

*Figure 2. Molding Flash. Case molds have upper and lower halves, which allow flash, the small amount of excess molding compound that remains after the device is ejected from the mold and the device is singulated and trimmed. Interlead flash is allowed between the case and the dambar protrusion, and is away from the critical soldering areas.*


Allegro MicroSystems, LLC
115 Northeast Cutoff
Worcester, Massachusetts 01615-0036 U.S.A.
1.508.853.5000; www.allegromicro.com

## Allegro Pb-Free Finish

The standard finish used by Allegro on its Pb-free devices is 100% matte tin plating. This finish has gained acceptance in the marketplace. It provides a robust solder joint when device terminals and solder lands are properly aligned, and common solder reflow profiles are followed. It has workable wear characteristics and does not use expensive noble metals as constituents.

Another advantage of matte tin finish is 100% backward-compatibility with traditional tin-lead (SnPb) solders of any composition. It can be soldered at any temperature that has been traditionally used for SnPb solder alloys. Thus, Allegro devices with 100% matte tin leadframe plating can be used in existing SnPb processes, including processes that peak below 232°C, the melting point of tin. This is because the matte tin dissolves easily into SnPb compounds.

# SOLDERS AND FLUXES

An appropriate combination of solder and flux must be used for attaching devices to PCBs. Optimum combinations take into account the leadframe finish of the device, as well as the PCB condition, process chemistry, and placement equipment characteristics.

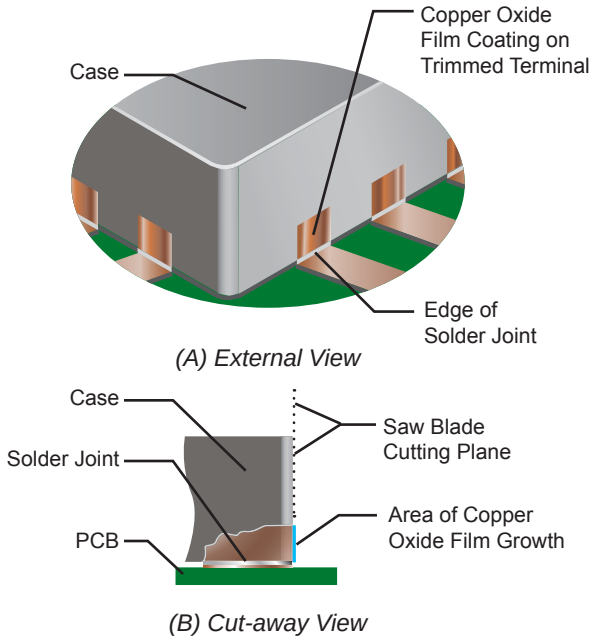


*Figure 3. QFN and SON Solder Joints. The saw blade cut or scored break edge leaves exposed copper in those designs where the terminal material extends to the edge of the package case after singulation.*

## Flux Alternatives

Allegro strongly recommends that experiments be conducted with several combinations of fluxes, solders, and terminal finishes. Fluxes and solder pastes must be properly stored and handled, according to manufacturer instructions. A series of assembly process combinations using different fluxes and conditions should be qualified, which can then be available to accommodate variances in device finishes and reflow temperature requirements.

For example, high-reliability devices, such as Allegro products, form good solder joints with fluxes that are more highly activated than the fluxes commonly used with lower-reliability devices. This is because Allegro devices undergo multiple additional cycles of testing, including hot, cold, and room temperatures, high humidity, electrical tests, and others. This normally degrades the terminal finish only slightly, but enough to be noticeable during soldering with low- or moderately-activated fluxes.

An important reason for experimenting with alternative fluxes is that using more highly activated solders can avoid adjustments to other process factors that can be more expensive or sensitive. Increasing process temperatures can improve solderability, but forcing temperatures too high can generate complications with materials. Further, in Pb-free processes the headroom for raising temperatures is limited because the baseline temperatures are already elevated.

Another process adjustment that can improve solderability is increasing the proportion of nitrogen in the atmosphere of the solder chamber. Newer processing equipment is equipped to support controlled atmosheres in process chambers. Allegro recommends use of nitrogen-enriched, controlled atmospheres in reflow soldering operations, particularly for Pb-free operations.

With regard to solderability, there are three basic classes of fluxes:

- aqueous-clean fluxes (the most highly activated)
- no-clean
- solvent-clean

Allegro highly recommends halide-free *aqueous-clean* fluxes because of their high activation levels. These also have the advantage of using surfactants for cleaning that are environmentally more benign than traditional solvent cleaning compounds. *No-clean* fluxes have an even greater environmental advantage, but are not as highly activated as the aqueous-clean fluxes. However, no-clean fluxes may be required where the clearance between the mounted package and the PCB surface is too narrow for cleansers to flow. In addition, no-clean fluxes must be used if there is no 100% halide-free aqueous flux qualified (ensure that the no-clean


Allegro MicroSystems, LLC
115 Northeast Cutoff
Worcester, Massachusetts 01615-0036 U.S.A.
1.508.853.5000; www.allegromicro.com

flux itself has 0% halides). Both of these flux types leave less residue or residue that is more benign than rosen-core or fluxes that must be removed with solvents.

Allegro packages are compatible with all process chemistries, including all halide-free aqueous- or solvent-based flux cleaning processes except 1,1,1-trichloroethane and trichloroethylene, which have been shown to produce chlorides that can corrode the devices. Those particular solvents have also been demonstrated to contribute to atmospheric ozone depletion and should be avoided.

### Alternative Solder Types

During the period of transition from Pb-based to Pb-free processes, a practical consideration is the backwards compatibility of Pb-free finishes with existing Pb-based processes. As described earlier in this application note, the prominent Pb-free finish, 100% matte tin, is backward-compatible with existing SnPb processes. It also is compatible with the most promising Pb-free solder alloys. Table 1 provides a basic comparison of a selection of Pb-free solder alloys.

Characteristics of materials and process chemistry integrity have become increasingly important with the stricter demands imposed by Pb-free processing. In general, Pb-free alloys have higher surface tensions and wet more slowly than Pb-based alloys, in addition to the requirement for more extensive preheating. This in turn places new demands on fluxes to remain active for longer periods of time, and to maintain their properties at elevated temperatures. Fluxes with stronger activation levels are typically required in Pb-free processes.

## CORROSIVE CONTAMINANTS

During assembly processes, the high processing temperatures can accelerate leaching, but more significant are the long-term effects. Leaching of various contaminates by water can occur over time, even in overmolded applications. This can lead to the formation of corrosive compounds after the end product has been sent to the field.

Major contributors to corrosion are halide compounds. Materials containing halides should be strictly avoided in the assembly process. This applies not only to fluxes, but also to solders and solder pastes, and to overmolding compounds. Of particular concern are Nylon overmolding compounds, which can be highly susceptible to moisture absorption.

The best defense against such corrosion is to eliminate halides from all materials used in the manufacturing process. For example, higher-grade Nylons typically have a minimal halide content. Such efforts should be supplemented by regular vetting of all process stages to ensure that no sources of contamination have been introduced. Sources can

Table 1. Comparison of Typical Solder Paste and Wave Solders

| Common Name | Typical Composition | Comment |
|---|---|---|
| BiSn | Bi 58% / Sn 42% | Melting point 138°C; Not recommended–relatively weak joint strength when subject to temperature cycling; compatible with 100% matte tin finishes; not compatible with existing SnPb finishes |
| SnPb (Eutectic) | Sn 60% / Pb 40% | Melting point 183°C; common use for electronic applications; compatible with 100% matte tin finishes; shiny appearance |
| SAC305 | Sn 96.5% / Ag 3.0% / Cu 0.5% | Melting point 219°C; compatible with existing SnPb finishes and 100% matte tin finishes; dull appearance |
| SnAg | Sn 96.5% / Ag 3.5% | Melting point 221°C; compatible with 100% matte tin finishes; not compatible with existing SnPb finishes |
| SnCu | Sn 99.3% / Cu 0.5 % | Melting point 227°C; compatible with existing SnPb finishes and 100% matte tin finishes; dull appearance |
| SN100 | Sn >98% / Cu <1.0% / Ni <1.0% | Melting point 232°C; compatible with existing SnPb finishes and 100% matte tin finishes; shiny appearance |
| SnPb (High-Temperature) | Sn 5% / Pb 95% | Melting point ≈ 300°C, common use for flip-chip and similar applications; compatible with 100% matte tin finishes and existing SnPb finishes |


Allegro MicroSystems, LLC
115 Northeast Cutoff
Worcester, Massachusetts 01615-0036 U.S.A.
1.508.853.5000; www.allegromicro.com

include not only materials consumed in manufacturing, but also substances that can be conveyed on the persons of production workers. Face masks, gloves, and suitable gowning should be in use at all times.

## ASSEMBLY CONSIDERATIONS

The interaction of the mechanical characteristics of the PCB, terminal, and solder joint also must receive renewed attention. A detailed discussion of soldering and other assembly methods is provided in the Allegro application note AN27703.1, *Guidelines for Designing Subassemblies Using Hall-Effect Devices*. The lowest peak reflow temperature (generally in the range 240°C to 260°C) that results in optimum soldering should be used.

### Solder Wetting

According to IPC-JSTD-001, a good joint has the appearance of adhesion and wetting to all soldered surfaces, and the blend from the solder surface to the soldered terminal or land surface should be smooth, usually with an angle of less than 90 degrees (although exceptions are provided). (Rev. D, §4.14). IPC-JSTD-001 does not require that all terminal areas with surface finish be covered with solder (Rev. D, §4.14.2).

At areas of the terminal where the finish is not present, wetting may not occur and solder adhesion cannot be guaranteed. A prime example is the extremity of a terminal, or of the dambar protrusions or intrusions, where trimming during singulation or device mounting leaves the core material of the terminal exposed. Another location of concern is the seating surface of the terminal, where the finish can be abraded by movement during handling.

### Fillet Shape

To promote well-formed solder fillets, lateral overlap of terminals and land areas by no less than 75% of the terminal width is required for high-reliability (IPC class 3) assembly, as shown in figure 4. Regardless of the amount of overhang, failure to form a solder side fillet on the overhung side of the terminal is a PCB alignment issue, rather than an outcome of finish chemistry. Allegro strongly recommends 100% overlap of the terminal width and foot with the PCB land pad. The formation of fully-filleted solder joints is not guaranteed where terminal and lands do not completely overlap.

An acceptable solder joint is typically one in which there is a well-formed solder fillet on each of the two sides of the terminal, on the heel, and a solder layer under the terminal foot, as shown in figure 5. In the standard JESD22, the *Critical Area* for gull wing solder joints comprises the lateral sides of the terminal and the underside of the terminal, where it meets the land pad (§5.3.3.2, *Accept/Reject Criteria*).

For detailed information on SMD solder joint evaluation, see IPC-A-610 §8 (also, the IPC *Desk Reference Manual for*

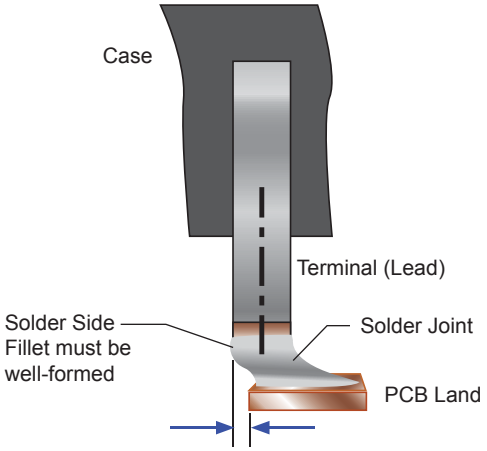


*Figure 4. Gull Wing Solder Joint. Although a maximum overhang of 25% of the terminal width or 0.5 mm, whichever is less, is allowed for a high-reliability (IPC class 3) assembly (IPC-A-610 §8.2.5), a fillet on the the outboard side of the terminal is always required.*

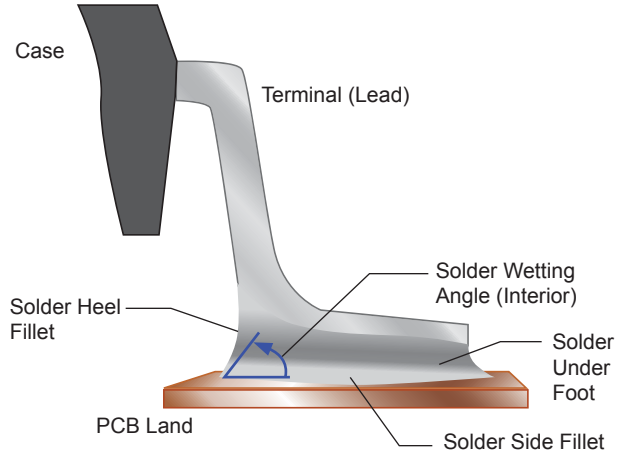


*Figure 5. Gull Wing Solder Joint. Under optimum conditions, a smooth, concave fillet at the heel and sides can be observed. A solder layer between the terminal foot and the land is critical. A low wetting angle is expected between the edge of the solder and the terminal and land surfaces.*


Allegro MicroSystems, LLC
115 Northeast Cutoff
Worcester, Massachusetts 01615-0036 U.S.A.
1.508.853.5000; www.allegromicro.com

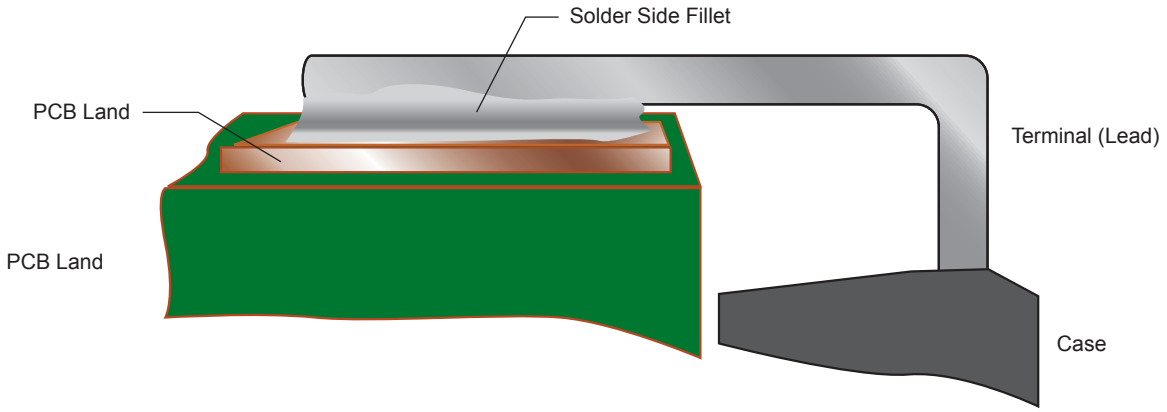


*Figure 6. Bent Lead Solder Joint. For straight terminals parallel to the PCB, such as an SIP with leads bent around the edge of a PCB, no lateral overhang of the terminal should be permitted for a high-reliability (IPC class 3) assembly. Solder underneath the lead should be thick, and a wetted fillet should be evident between the lead and the lands (IPC-A-610 §8.2.5.7).*

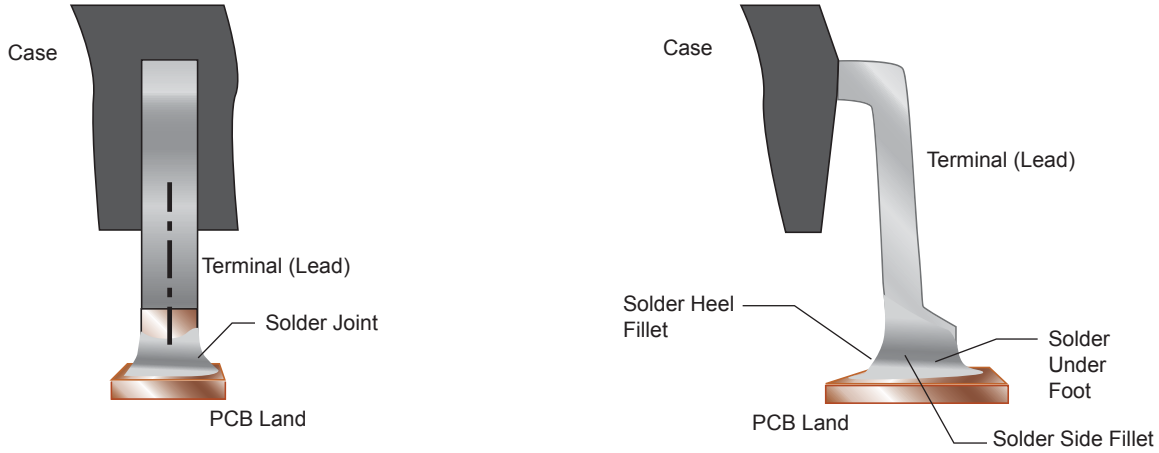


*Figure 7. Mini Gull Wing (L Lead) Solder Joint. Although this type of terminal has the basic shape of a full gull-wing terminal (IPC-A-610 §8.2.5.), the truncated foot requires additional attention for joint strength, such as the specification for the butt terminal joint (IPC-A-610 §8.2.8). Although high-reliability (class 3) is not defined for the butt joint, similar minimal rules, including no toe overhang, a minimum 75% terminal width fillet, as well as practical rules of no terminal lateral overhang, and maximum heel fillet, should be observed.*


Allegro MicroSystems, LLC
115 Northeast Cutoff
Worcester, Massachusetts 01615-0036 U.S.A.
1.508.853.5000; www.allegromicro.com

*Surface Mount Solder Joint Evaluation* provides examples of target conditions and fillet shape acceptance criteria). For flat ribbon, L, and gull wing terminals, such as those shown in the illustrations on the previous pages, solder thickness is considered adequate when a wetted fillet is evident between the solder and the terminal and PCB land (§8.2.5.7). The minimum length of the side fillet is specified as the greater of either 3 times the width of the terminal or 75 % of the terminal foot length over the PCB land when the foot length is at least 3 times the width of the terminal(§8.2.5).

With regard to toe fillets, IPC provides for exposure of base material in trim areas of terminals (IPC J-STD-001, Rev. D, §4.14.1). Thus, fillets at the underside of the toe are expected, but fillets covering the entire toe may be more difficult to achieve where there is exposed copper.

JESD22 does not include the top surface of a gull wing terminal in consideration of the solder joint Critical Area (JEDEC figure 2). The top surface also is not included in the IPC-2221A solder joint description notation (IPC figure 8-16) or in the IPC J-STD-001 acceptability standards. Care is recommended to avoid excessive solder fillet height, to avoid contact with the device case. When using exposed terminal designs, such as gull-wing, optimized process conditions may be required to enable the solder to wick over the 90-degree edges of the top surface of the terminal, and adhere to it. In general, greater quantities of more active fluxes are necessary to ensure solder coverage of the top surface of a gull-wing lead. Thus, the top surface of a terminal is not guaranteed to solder. Flow characteristics of solders should be evaluated to ensure proper filleting of the heel, toe, and side terminal joints.

## Manual Soldering

Manual soldering of through-hole devices is acceptable, as long as care is taken to prevent the package body from being exposed to excessive temperatures. In general, manual soldering of SMDs should be avoided because of the difficulty in controlling the preheating and cooling phases of the soldering procedure.

Hot air guns should not be used. Their effect can be difficult to control because they produce large volumes of heated air that can quickly damage plastic components and overspread the PCB, loosening the joints of adjacent components.

If manual assembly is required (such as for prototype assembly or board rework), a soldering iron is preferred, in particular irons that are self-regulated and can be set to maintain a maximum temperature of under 350°C. An example is the Metcal SmartHeat™. The iron temperature should be set as low as possible without extending the soldering time. Only trained, experienced technicians should be allowed to perform the soldering.

## Welding

Welding of copper-core terminals for Allegro devices that have long terminal lengths should be performed using a method that results in the lowest temperature (power setting) consistent with a good solder joint, so as to minimize the spattering of the terminal finish. Allegro reduces average terminal thickness to be more compatible with welding processes.

Allegro finishes have a mean thickness of approximately 450 µin., with a range of 300 to 800 µin., measured at the active area of the terminal on the seating plane. This thickness is considered optimal for processing because thicker finishes, on the order of 600 µin. or more, have a greater propensity to splatter, particularly at the elevated temperatures found in welding.

Optimum process temperatures should be determined experimentally, to ensure that the finish can be melted for proper bonding, without boiling and spattering. Welding at too high a temperature results in boiling away the finish from the terminals while bonding the core material of the terminal directly to the copper of the contact pad.

Efforts must be made to shield surrounding areas form the spatter of the molten finish. When solder or the finish is overheated, spattering can occur, forming solder balls on adjacent surfaces, and potentially bridging contacts or traces.

## Reflow

Carefully designed solder-reflow profiles are the optimum method for processing SMD package types for both traditional SnPb solders and for Pb-free solders. The maximum temperatures used for Pb-free solder processes tend to be higher than the traditional SnPb processing temperatures.

Figure 8 shows a typical higher temperature solder-reflow profile for SMD packages using traditional SnPb solder. Figure 9 provides a typical maximum solder-reflow profile for SMD packages, using Pb-free solders. Comparison of the two figures reveals the extent to which Pb-free processing may require higher maximum process temperatures.

Reflow soldering of through-hole devices is acceptable, as long as the plastic body of the device is not exposed to excessive temperatures. Exceptions to the above are the SA

and SB package types, which have a thermoplastic housing that can deform if exposed to such high temperatures. If it is necessary to perform a reflow process on these packages, a special protective pallet must be built to shield the SA and SB packages so that the temperature of the housings does not exceed 170°C.

## Wave Soldering

Wave soldering of SMD packages is not recommended by Allegro. The only exception to this is the LH (SOT23W) package, which can be wave-soldered using the profile in figure 10.

Allegro through-hole devices are designed to be used in a wave-soldering process. A typical wave-solder profile is shown in figure 10.

When performing wave soldering, adequate spacing between the body of the device and the board should be maintained, and only halide-free fluxes should be used. For ACS75x current sensors, package CA or CB , a preheat ramp rate of 2 to 5°C/s may be used.

## Rework

Frequently, when a device is removed after mounting on a PCB, mechanical damage occurs to the device. Before removing a device, a full qualified reflow profile should be completed, observing prebake and other MSL precautions, and no attempt to remove the device should be attempted before or after the solder has fully reflowed, and the device can be removed with minimal mechanical effort.

Rework with a Pb-free process may require an adjustment to procedures. For example, using standard copper braid tape to wick residual reflowed solder may require depositing a few drops of halide-free flux onto the tape to enable flow. Tape with preembedded flux is also available.

Even when following appropriate procedures to remove a device, remounting of the device is typically not practical, and Allegro does not recommend reusing devices. The heating and exposure of terminals during mounting and removal oxidizes the terminal finishes, reducing the ability to wet. When remounting is attempted and fails, additional oxidization occurs, requiring remounting to take place at temperatures significantly above the original reflow profile, at levels that may damage the device or the surrounding PCB components.

When reworking a device mounting, the following procedure is recommended:

1. Carefully remove the previous device, using MSL precautions as described above.
2. Thoroughly clean all solder and flux residues from the rework site.
3. Stencil new solder paste on to the site.
4. Prebake and reflow the site using qualified profiles.
5. Mount the new device.
6. Complete the qualified reflow profile cooling cycle.

## Joint Preservation

After removal of flux residue, the solder joint should be protected from moisture and potentially corrosive contaminants by applying a conformal coating to the assembled PCB. Allegro highly recommends this step, which has been demonstrated to be extremely effective, both in HAST (High Acceleration Stress Testing) and in fielded applications in harsh environments.

The preferred coating material is urethane. Alternatively, silicone can be used. The coating should be applied over the solder joints, terminals, and device case as a minimum. For more reliability in coverage, the coating should be applied to the entire PCB assembly whenever practicable.

## Circuit Design

The thermal conductivity of the application can affect the soldering results on an individual terminal basis. This is particularly noticeable with signal ground terminals that are connected to large ground planes, and with terminals that are connected to significant areas of exposed copper traces, or connected by short traces to other nearby components. These objects can all act as heat sinks, and additional heat soak time or a higher reflow temperature should be considered for such terminals.

## Dip Testing

A common method of testing solderability is the dip-and-look method. In order for this method to yield accuracte results, however, the terminals of the device under test must be preheated for a period of time that is adequate for their thermal characteristics. Devices with very long leads, for example through hole devices such as the Allgero K package, typically require an optimum heat soak of 5 seconds, as described in the J-STD-002 standard.

# CONCLUSION

Through careful adherence to standard assembly procedures and MSL-based handling protocols, Allegro devices provide reliable performance. Contact an Allegro sales or service office for additional information on device handling and assembly.


Allegro MicroSystems, LLC
115 Northeast Cutoff
Worcester, Massachusetts 01615-0036 U.S.A.
1.508.853.5000; www.allegromicro.com

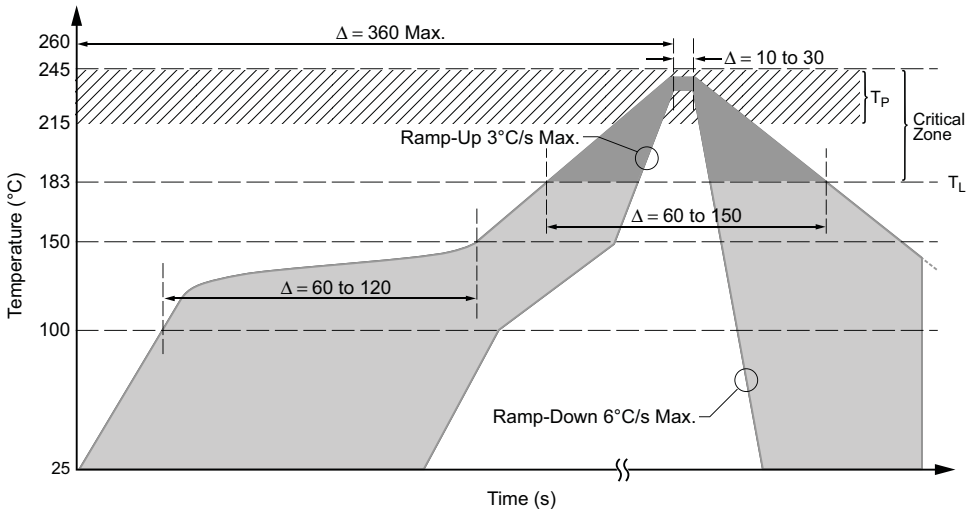


*Figure 8. Solder Reflow Profile for SMD Using Traditional Tin-Lead Solder. The typical acceptable maximum temperature range, $T_P$, is 215°C to 245°C. Temperatures refer to upper surface of the package case.*

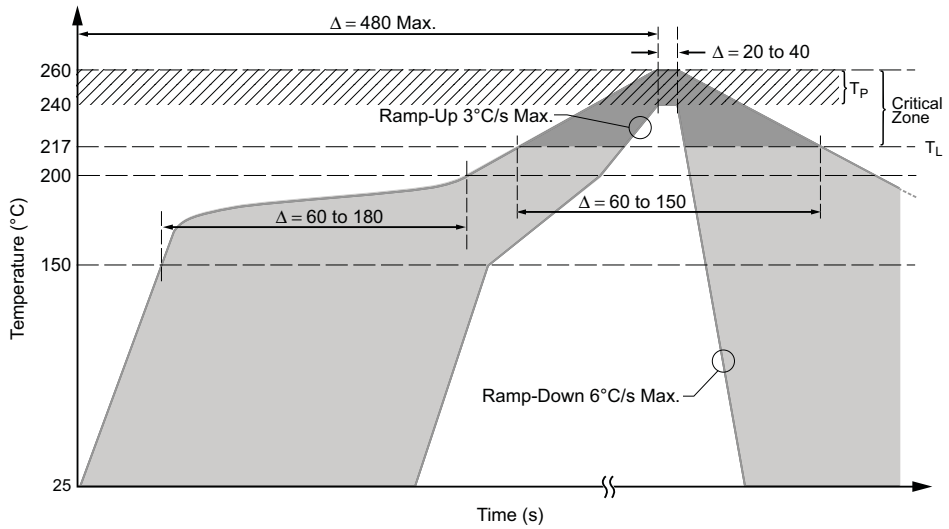


*Figure 9. Solder Reflow Profile for SMD Using Lead (Pb) Free Solder. The typical acceptable maximum temperature range, $T_P$, is 240°C to 260°C. Temperatures refer to upper surface of the package case.*



Allegro MicroSystems, LLC
115 Northeast Cutoff
Worcester, Massachusetts 01615-0036 U.S.A.
1.508.853.5000; www.allegromicro.com

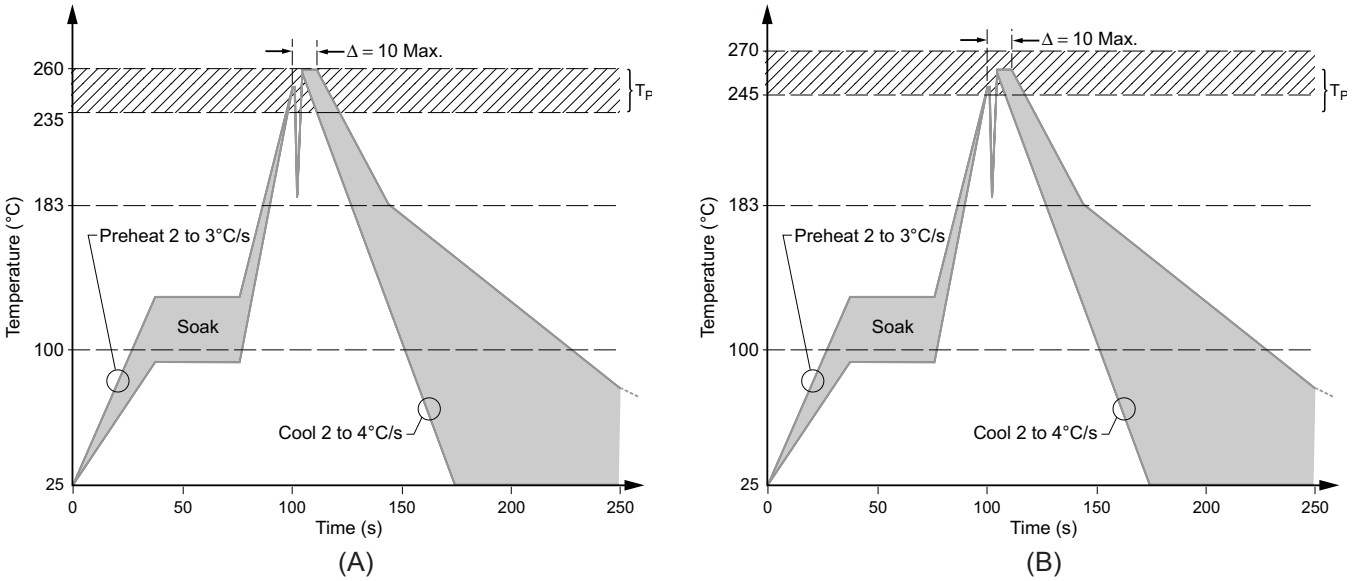


*Figure 10. Solder Profile for Through-Hole Wave Solder Using (A) Traditional Tin-Lead Solder and (B) Pb-free solder.*

*The information included herein is believed to be accurate and reliable. However, Allegro MicroSystems, LLC assumes no responsibility for its use; nor for any infringement of patents or other rights of third parties which may result from its use.*
*Copyright © 2005-2013 Allegro MicroSystems, LLC*