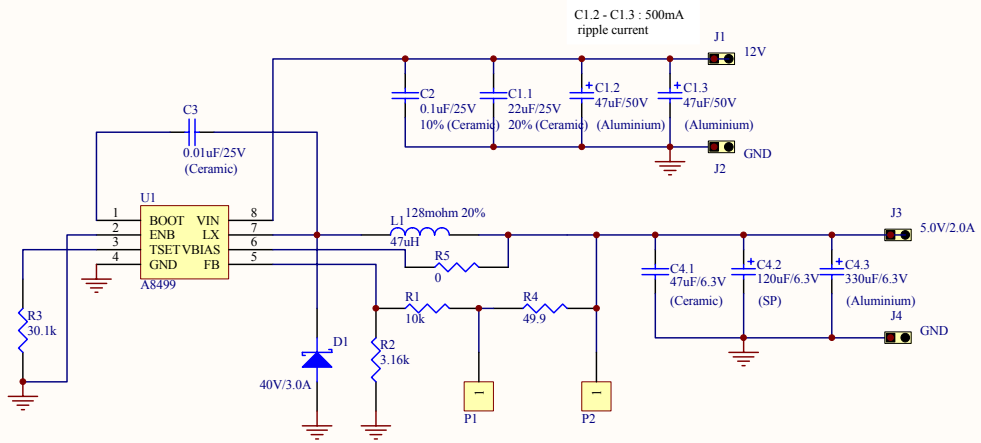

Title: *Application Circuit - A8499*			*Allegro Microsystems Argentina*
Size: Letter	Number: 01	Revision: 01	
Date: 04/29/05	Time: 12:53:37	Sheet1 of 1	
File: A8499.sch			