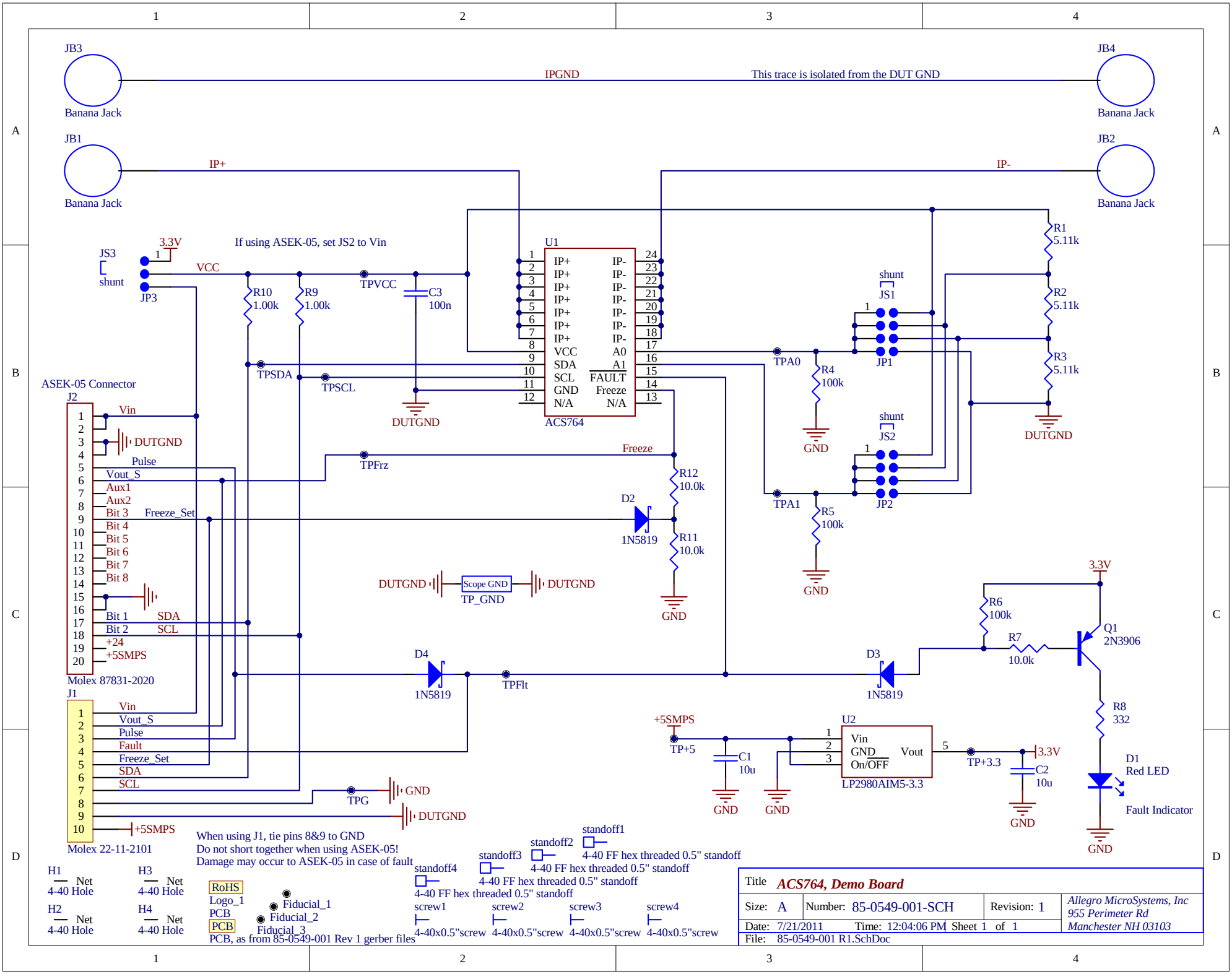
JB3
Banana Jack
IPGND
This trace is isolated from the DUT GND
JB4
Banana Jack
JB1
Banana Jack
IP+
IP-
JB2
Banana Jack
JS3
shunt
JP3
3.3V
VCC
If using ASEK-05, set JS2 to Vin
R10
1.00k
R9
1.00k
TPVCC
C3
100n
TPSDA
TPSCL
DUTGND
U1
IP+
IP-
VCC
A0
SDA
A1
SCL
FAULT
GND
Freeze
N/A
ACS764
R1
5.11k
R2
5.11k
R3
5.11k
shunt
JS1
JP1
TPA0
R4
100k
GND
shunt
JS2
JP2
TPA1
R5
100k
GND
DUTGND
ASEK-05 Connector
J2
Vin
DUTGND
Pulse
Vout_S
Aux1
Aux2
Bit 3
Freeze_Set
Bit 4
Bit 5
Bit 6
Bit 7
Bit 8
Bit 1
SDA
Bit 2
SCL
+24
+5SMPS
Molex 87831-2020
TPFrz
Freeze
R12
10.0k
D2
1N5819
R11
10.0k
GND
DUTGND
Scope GND
TP_GND
DUTGND
3.3V
R6
100k
R7
10.0k
Q1
2N3906
D4
1N5819
TPFlt
D3
1N5819
R8
332
J1
Vin
Vout_S
Pulse
Fault
Freeze_Set
SDA
SCL
TPG
GND
DUTGND
+5SMPS
Molex 22-11-2101
+5SMPS
TP+5
C1
10u
GND
GND
U2
Vin
GND
On/OFF
Vout
LP2980AIM5-3.3
TP+3.3
3.3V
C2
10u
GND
D1
Red LED
Fault Indicator
GND
When using J1, tie pins 8&9 to GND
Do not short together when using ASEK-05!
Damage may occur to ASEK-05 in case of fault
H1
Net
4-40 Hole
H3
Net
4-40 Hole
H2
Net
4-40 Hole
H4
Net
4-40 Hole
RoHS
Logo_1
PCB
PCB
Fiducial_1
Fiducial_2
Fiducial_3
PCB, as from 85-0549-001 Rev 1 gerber files
standoff1
4-40 FF hex threaded 0.5" standoff
standoff2
4-40 FF hex threaded 0.5" standoff
standoff3
4-40 FF hex threaded 0.5" standoff
standoff4
4-40 FF hex threaded 0.5" standoff
screw1
4-40x0.5"screw
screw2
4-40x0.5"screw
screw3
4-40x0.5"screw
screw4
4-40x0.5"screw
Title
ACS764, Demo Board
Size: A
Number: 85-0549-001-SCH
Revision: 1
Date: 7/21/2011
Time: 12:04:06 PM
Sheet 1 of 1
File: 85-0549-001 R1.SchDoc
Allegro MicroSystems, Inc
955 Perimeter Rd
Manchester NH 03103