TED-0003299 **Design Cover Sheet** **5/29/2020**

ASEK37002C, MC, Board, **Page 1 of 1**

Demo, BB Kit

Originator: Eric Arroyo

			Design Rev ->	A											
Doc	Size	Format	Name, Description	Sub-Document Revision											
REV	A	pdf	Revision Control	1											
ASY	A	pdf	Assembly Instructions	1											
BOM	A	pdf	Bill of Materials	1											
SCH	A	pdf	Schematic	1											
BLD	-	zip	Bill of Materials, ASCII files	1											
FAB	-	zip	Gerber Files	1											

This page intentionally left blank.

Originator: Eric Arroyo

1. RoHS Compliance Required?
   Yes.

2. All soldering must meet the criteria for Class II or better per
   IPC-A-610 Solder Joint Acceptance Criteria.

3. All assemblies to be cleaned of flux residues and other contaminates.

4. Visual quality inspection expected on all completed assemblies.

5. Functional testing not required unless otherwise specified below.

6. Completed assemblies to be shipped in ESD bags.

7. All component substitutions to be approved by Allegro.

8. Other Allegro Specifications required for build:
   [This only applies to internal assembly steps.]
   PRC-0002193 (BOM substitution guide).

9. Are there optional ways to build this TED pack?
   No.

Assembly:

1. Install all SMT parts.
   If Allegro supplies SMT devices they may be installed at this time.

2. Install any thro-hole Keystone testpoints (if applicable).
   Testpoint loops shall be installed in this orientation:

   Long axis of the board

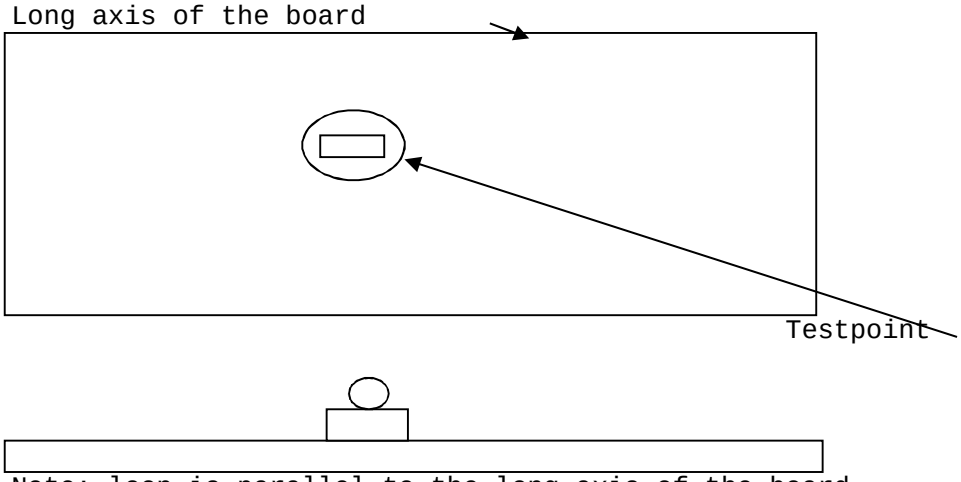

   Note: loop is parallel to the long axis of the board.
   If board is square or round then align testpoints in same direction.

3. 18g jumper for scope ground (if used):
   Use 18g buss wire, 0.5 inch body, with 0.375 inch leads bent 90 degree.
   Install 0.25 inch above PCB (not critical).
   Solder and trim.

This component will be used for scope ground clips.

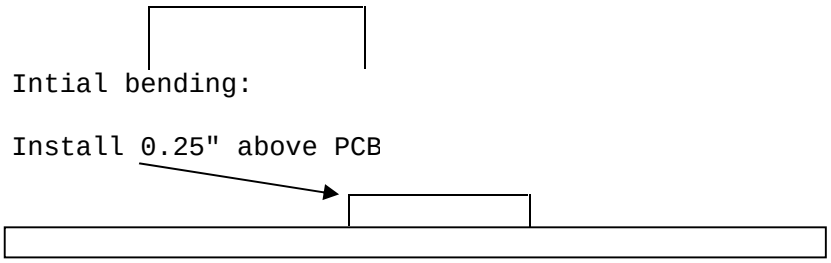

Labeling:

1. Not required.

ASEK37002C, MC, Board, Demo, BB Kit **Bill of Materials** **Rev 1**
TED-0003299-REV **Page 1 of 1** **6/1/2020**
Originator: Eric Arroyo

Item	Qty	S	Manufacturer	P/N	Description	Designator
1	1	10			Do Not Install	U1
2	1	10	Sullins Connector Solutions	PRPC004DBAN-M71RC	Connector Header Through Hole, Right Angle 8 position 0.100" (2.54mm)	J1
3	1	6	National Semi	LP2980AIM5-5.0/NOPB	IC, SOT-23-5, regulator, 5V, 0.5%	U2
4	1	6	AVX	06035A102JAT2A	capacitor, 0603, mono, C0G, 50V, 1nF	C5
5	1	6	AVX	06035C104K4T2A	capacitor, 0603, mono, X7R, 50V, 100nF	C3
6	2	6	Murata	GRT31CR61H106ME01L	capacitor, 1206, mono, X5R, 50V, 10%, 10uF	C1, C2
7	5	6			Do Not Install	C4, C6, R3, R5, R6
8	1	6	Panasonic	ERJ-3EKF1001V	resistor, 0603, 100mW, thick film, 1%, 1.00kohm	R1
9	1	6	Panasonic	ERJ-3EKF1002V	resistor, 0603, 100mW, thick film, 1%, 10.0kohm	R2
10	1	6	Bourns	3352T-1-503LF	potentiometer, thro, 50k	R4
11	1	6			Do Not Install	R8
12	2	6	Emerson	111-2223-001	connector, thro, banana jack (5 way binding post)	IP+, IP-
13	4	6	AMP	9-146277-0-03	jumper, thro, 3 pin male, gold plating	JP1, JP2, JP3, JP4
14	10	6	Keystone	5005	testpoint, thro, compact, for 62mil PCB, red	TP1, TP2, TP3, TP4, TP5, TP6, TP7, TP8, TP9, TP10
15	1	6			jumper, thro, used as scope gnd, bend from 18g wire, install 0.25inch above PCB	TPScope
16	2	6			Nothing to Install -- Fiducial Mark for PCB	F1, F2
17	1	10			PCB, as from TED-0003299 Rev 1 gerber files	PCB

RoHS Compliance Required
This BOM generated in conformance with PRC-0002193 Revision 0.

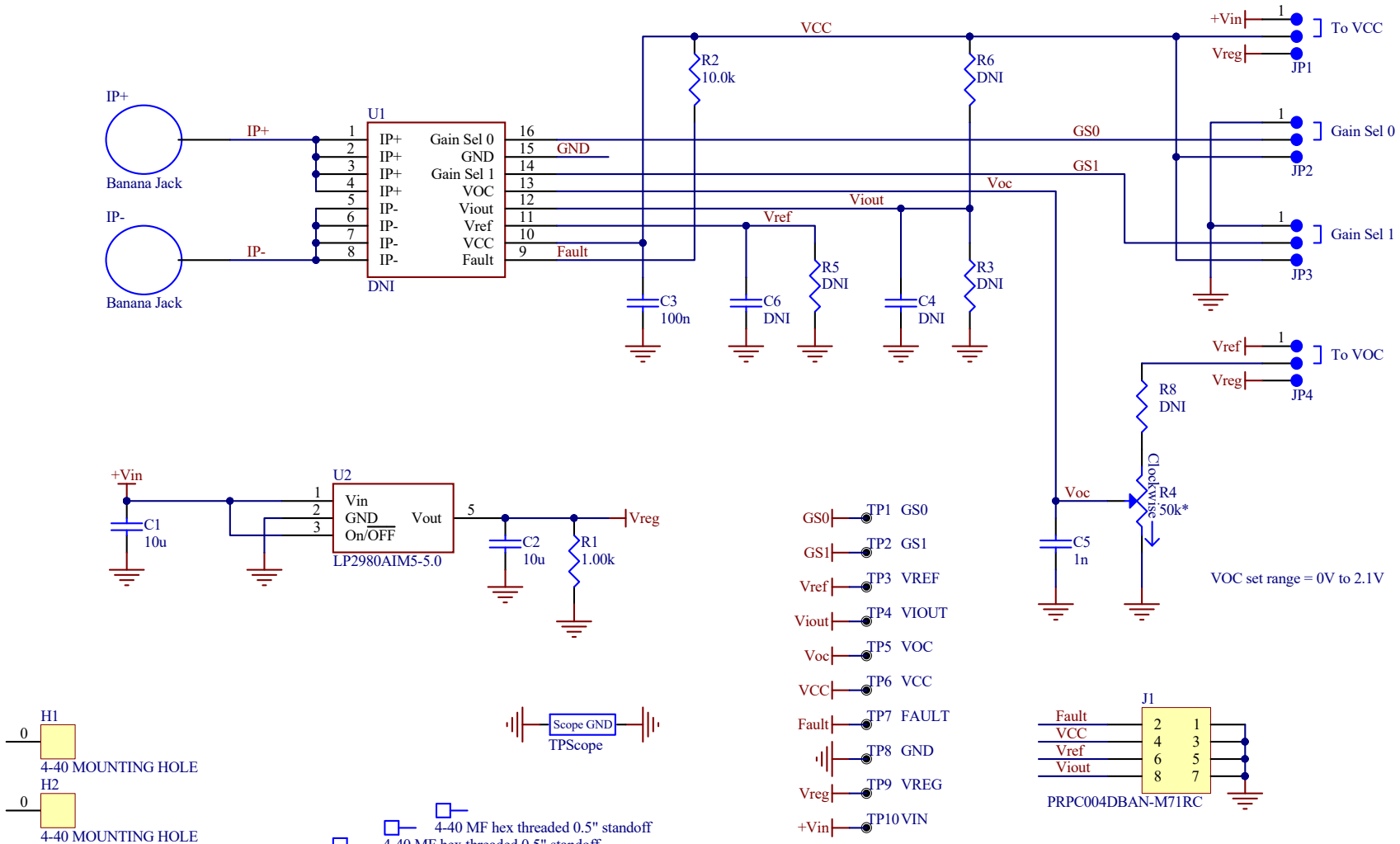

Title: *ASEK37002C, MC, Board, Demo, BB Kit*			
Size: A	Number: TED-0003299-SCH Author: R. Krystian	Revision: 1	*Allegro MicroSystems* *955 Perimeter Rd* *Manchester NH 03103*
Date: 5/29/2020	Time: 5:22:16 PM	Sheet 1 of 1	
File: 3299.SchDoc			